VERTICAL GAS ENGINES

Digitized by the Internet Archive
in 2015

https://archive.org/details/verticalgasengin00vacu

Vertical Gas Engines

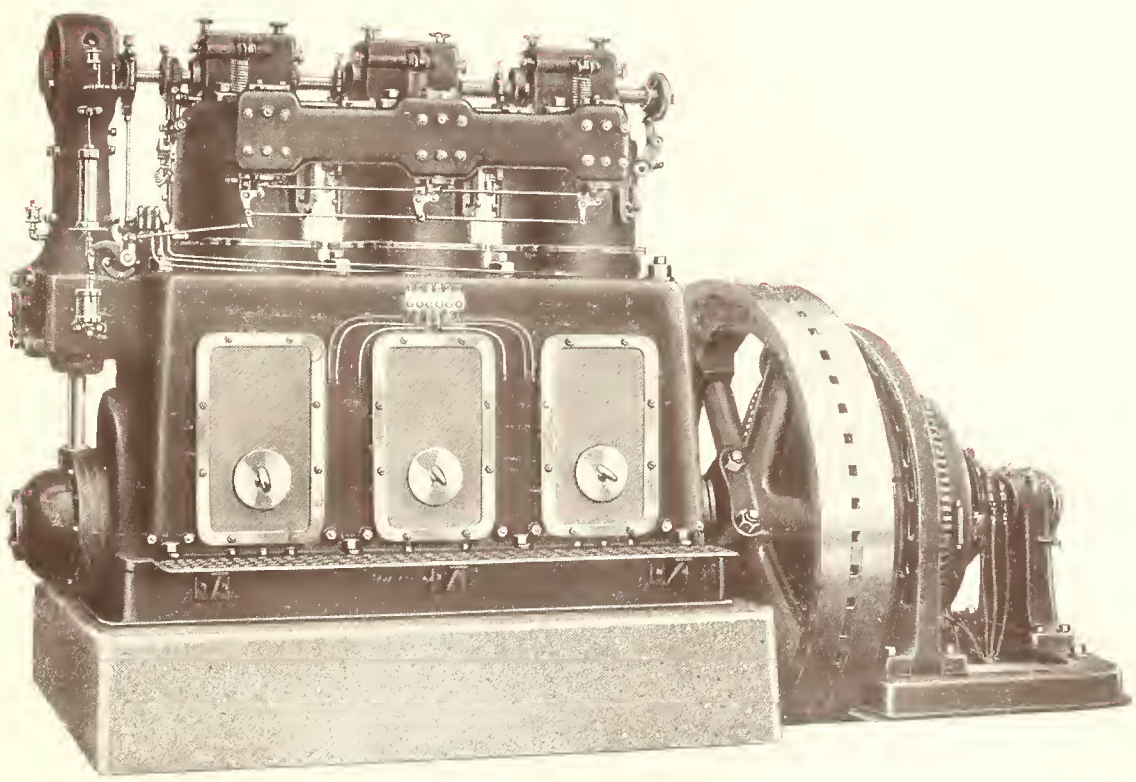

Fig. 1. Outside View of a Vertical, Four Stroke Cycle, Single Acting, Multi-Cylinder Gas Engine

VACUUM OIL COMPANY

Rochester, N. Y., U. S. A.

GUIDE LETTERS FOR ENGINE PARTS

A, A1, etc., Cylinder.

B, etc., Piston.

C, etc., Connecting Rod.

D, etc., Crosshead.

E, etc., Crank Pin.

F, etc., Crank Shaft.

G, etc., Timing Shaft or Eccentric.

H, etc., Valves.

K, etc., Cooling.

O, etc., Lubrication, Mechanical.

P, etc., Lubrication for Internal Parts, Drop Oiler.

R, etc., Lubrication for External Parts, Oil Ring, Ring Oiling.

S, etc., Lubricator, Sight Feed Drop Oiler.

T, etc., Lubrication, Circulation System.

In all illustrations red indicates oil, blue indicates air, green indicates water, and yellow indicates gas.

COPYRIGHT, 1917, BY
VACUUM OIL COMPANY
ROCHESTER, N.Y., U.S.A.

FIRST PRINTING

VERTICAL GAS ENGINES

Classification; Field of Service; Construction; Principle of Operation; Cooling; Gas; Methods of Lubrication; Oil; Deposits

CLASSIFICATION

Type	*No. of Cylinders*	*H.P. per Cylinder*	*Revolutions per Minute*
Four-Stroke Cycle			
Single Acting Multi-Cylinder	One to Six	5—125	350—225
Single Acting Tandem Multi-Cylinder	Four to Twelve	5—125	350—225
Two-Stroke Cycle			
Double Acting	Two to Four	200—500	160—140

Practically all vertical gas engines are of the four-stroke cycle types.

Vertical two-stroke cycle gas engines, built in large sizes only, are still in the experimental stage.

FIELD OF SERVICE

Vertical gas engines are principally used for driving electric generators which produce current for lighting or for operating electric motors. They are also used for driving air compressors, and as power units are employed in refrigerating plants and pumping stations.

CONSTRUCTION

There are two types of vertical four-stroke cycle gas engines—the single acting, multi-cylinder type, as illustrated in Fig. 1 and sectional view Fig. 2; and the single acting, tandem multi-cylinder type, as illustrated in Fig. 3 and sectional view Fig. 8.

Vertical four-stroke cycle gas engines are rarely built with one cylinder only; they generally have three or four cylinders.

The tandem multi-cylinder type, so called because of the arrangement of the cylinders in tandem—*i.e.*, in pairs, one above the other—usually have four or six cylinders.

Vertical two-stroke cycle gas engines are double acting, *i.e.*, explosions occur on both sides of the piston. They operate at comparatively slow speed, and the pistons are oil or water cooled. They are so few in number that a discussion of them is unnecessary at this time.

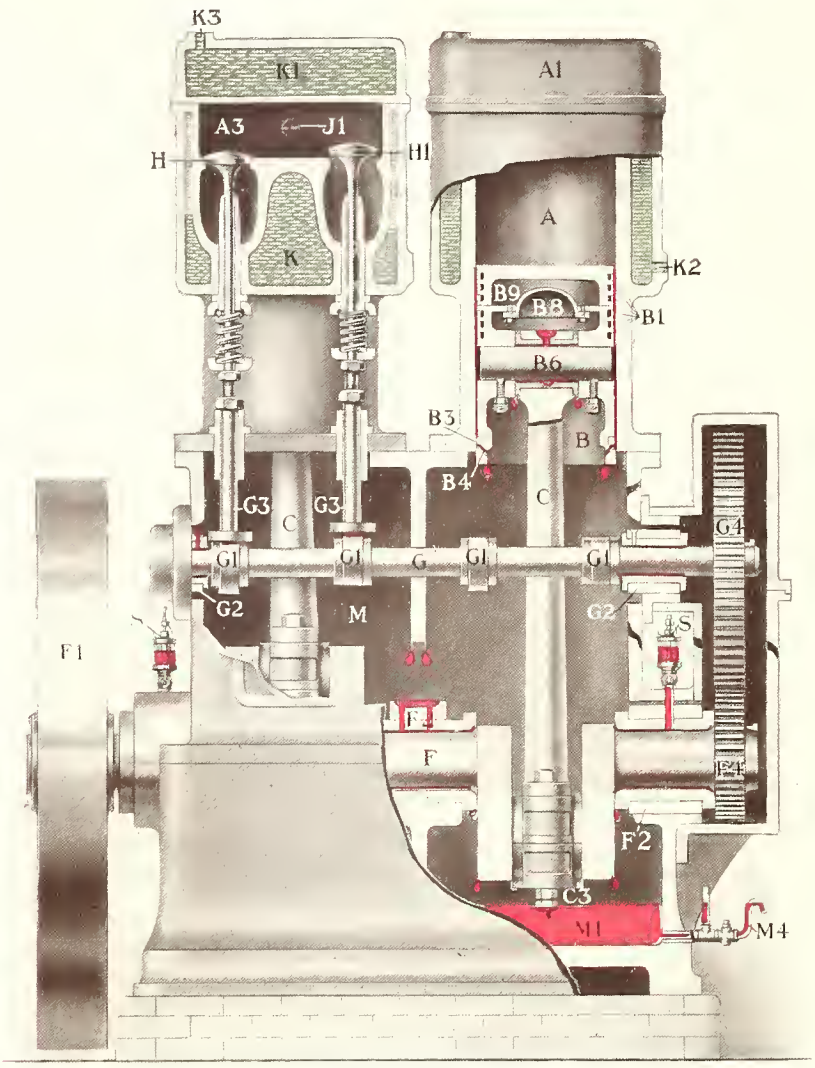

Fig. 2. Sectional View of a Vertical, Four-Stroke Cycle, Single Acting, Multi-Cylinder Gas Engine

VERTICAL FOUR-STROKE CYCLE GAS ENGINES

Single Acting, Multi-Cylinder Type (Fig. 2)

In the cylinder (A) is a close-fitting trunk piston (B)—a long, open-ended, hollow piston—fitted with piston rings (B1), preferably held in position in their grooves and prevented from revolving by means of pins (not shown), placed in different positions for the different rings, so that the joints of the rings cannot work in line and allow the gases to blow past them.

To the wrist pin (B6) is pivoted one end of the connecting rod (C), the large end (C_3) engaging the crank pin. Thus the vertical, straight-line movement of the piston (B) is transformed into rotary motion of the crank shaft (F).

On the crank shaft (F), which is supported by main bearings (F2), is fixed the fly-wheel (F1).

The piston (B) is preferably built in two parts. A plate (B8), inserted between the top and bottom portions, prevents the oil from splashing up into the hot, hollow piston head (B9) where it would burn and char.

If the gas engine drives an electric generator, the power is usually transmitted from the engine shaft to the generator shaft by means of a coupling.

From the crank shaft (F) is driven the cam shaft or timing shaft (G) by means of gears (F4) and (G4). The timing shaft (G) is supported by bearings (G2). Cams (G1) fixed on the timing shaft (G) operate the inlet valves (H) and the exhaust valves (H1) by means of push rods and springs.

The timing shaft (G) also operates the magneto (not shown), which supplies electric current for the ignition of the fuel charges in the combustion chamber of the cylinder (A) by producing a spark at the spark plug (J1), at the proper instant.

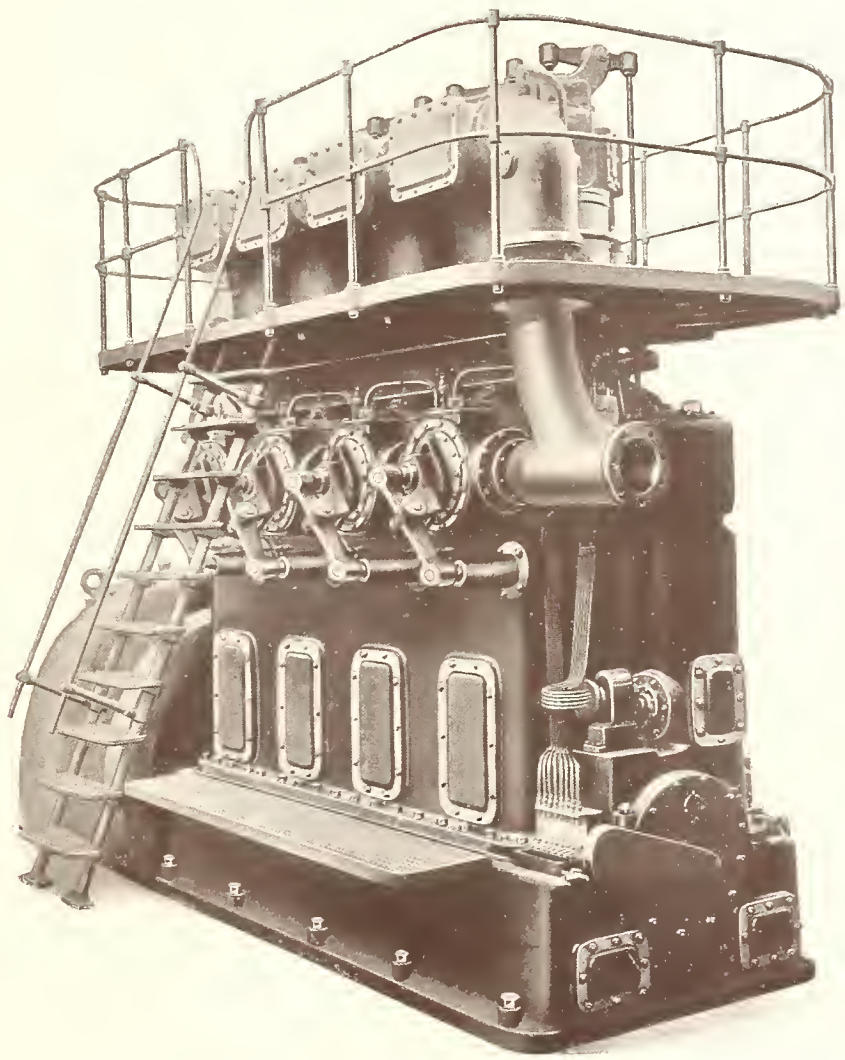

Fig. 3. Outside View of a Vertical, Four-Stroke Cycle, Single Acting, Tandem Multi-Cylinder Gas Engine

Single Acting. Tandem Multi-Cylinder Type

(Fig. 8, page 12, side view, partly in section.)

The engine parts are exactly as just described for the Multi-Cylinder type, with the following additions:

The lower piston (B) is bolted securely to the top piston (B), in each pair or tandem arrangement, by means of the piston rod (B7).

A water-cooled stuffing box or sleeve (A2) in the head of each bottom cylinder acts as a seal, preventing the escape of gases.

This tandem arrangement of pistons permits a double power effort of each connecting rod attached to the crank shaft, as explained in detail under Principle of Operation, on page 7.

PRINCIPLE OF OPERATION

Vertical four-stroke cycle, single acting gas engine operation is as follows (Fig. 4); beginning with the cut at the left, each of the four piston strokes is illustrated.

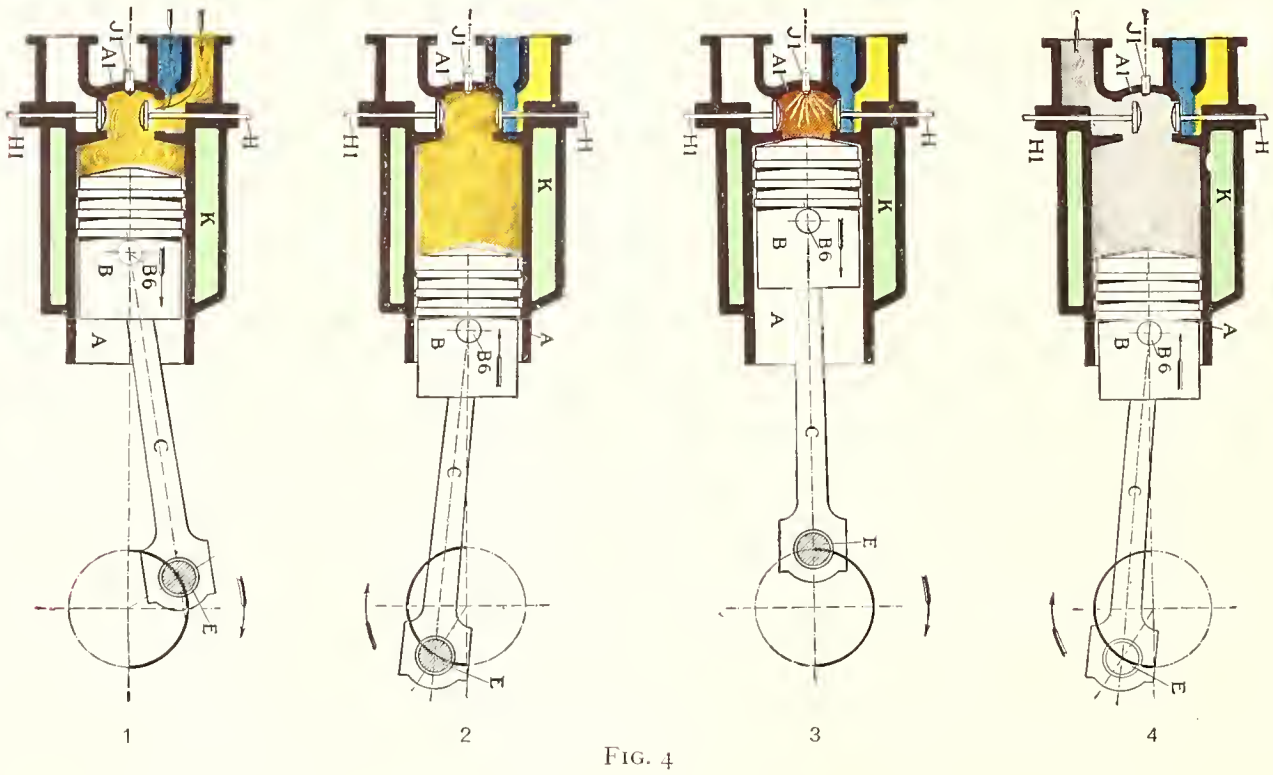

FIG. 4

First or Suction Stroke	Gas and air, constituting the fuel charge, are sucked into the cylinder (A) through the open inlet valve (H) as the piston (B) moves *downwards*, away from the cylinder head (A1). Exhaust valve (H1) is closed.
Second or Compression Stroke	The piston (B) moving *upwards*, towards the cylinder head (A1), compresses the fuel charge. Both inlet and exhaust valves (H) and (H1), respectively, are closed.
Third or Power Stroke	Ignition by the spark at the spark plug (J1) of the compressed fuel charge produces explosion and expansion of the gases, forcing the piston (B) *downwards*, away from the cylinder head (A1) *on its power stroke*. Both inlet and exhaust valves (H) and (H1), respectively, are closed.
Fourth or Exhaust Stroke	The piston (B) moving *upwards*, towards the cylinder head (A1), drives the burned gases out thru the open exhaust valve (H1). Inlet valve (H) is closed.

Thus the four strokes of the piston, *i.e.*, one power stroke and three preparatory strokes, complete the cycle of events; hence the expression four-stroke cycle.

Explosions occur only on one side of the piston; hence the expression single acting.

In a one-cylinder, four-stroke cycle, single acting gas engine, one power stroke occurs during two revolutions of the flywheel.

The power strokes for vertical, four-stroke cycle, single acting, single and multi-cylinder gas engines occur as shown in the following chart:

Number of Cylinders	*Number of Power Strokes*	*Revolutions of Flywheel*
1	1	2
2	2	2
3	3	2
4	4	2
6	6	2

In the tandem multi-cylinder type engine, the cylinders are arranged in pairs, one above the other, as previously described (see Figs. 3 and 8).

Consider one pair or a single tandem-cylinder engine. The cycle of events that occurs in each cylinder of the pair is identically the same as that just described for a single-cylinder engine. Each event in the cycle in the lower cylinder, however, occurs two strokes later than the corresponding event in the cycle in the upper cylinder, as illustrated in the following chart:

Stroke of Cycle	1	2	3	4
Upper Cylinder	Suction	Compression	Power	Exhaust
Lower Cylinder	Power	Exhaust	Suction	Compression
Stroke of Cycle	3	4	1	2

The cycles of events in each cylinder are completed in the same four strokes of the piston, or during the same two revolutions of the flywheel. Hence, from the foregoing and Fig. 8, it is obvious that in a single tandem-cylinder, four-stroke cycle, single acting, vertical gas engine there are two power strokes during four strokes of the piston, or one power stroke for every revolution of the flywheel.

In tandem multi-cylinder engines having more than one pair of cylinders there will be one power stroke for every revolution of the flywheel for each tandem pair of cylinders, as shown by the following chart:

Number of Tandems	*Number of Cylinders*	*Number of Power Strokes*	*Revolutions of Flywheel*
2	4	2	1
3	6	3	1
4	8	4	1
6	12	6	1

COOLING

In gas engines a temperature of about 2000° F. is developed at the instant of explosion of the gases in the cylinder. As the gases expand the temperature decreases. The temperature of the exhaust gases averages about 750° F.

Cooling of all the parts of gas engines that come in contact with the hot gases is necessary. Without adequate cooling, unequal expansion and distortion of the overheated parts, excessive wear and piston seizure would occur.

The cooling water enters the water jacket (K—Figs. 2 and 8) through pipe (K2) and circulates around the cylinder walls (A).

The water leaves the jacket through the outlet (K3) and, rising through this pipe, enters cooling tanks or towers (not shown). The water after cooling is usually returned to the engine by a circulating pump (not shown), reentering the cylinder jacket by pipe (K2).

For cooling purposes, city water is sometimes employed, being connected directly to the water jacket opening (K2). In such cases the used water is allowed to run to waste.

In the inlet and outlet pipes (K2) and (K3), respectively, should be fitted thermometers for registering the temperature of the cooling water.

If the temperature of the outlet water from the water jacket is much above 130° F. the cooling of the cylinder walls becomes deficient. The temperature rises, the oil film is thinned out, losing its sealing power, and the exploding gases blow past the piston.

If the temperature of the outlet water is much below 100° F. the cooling of the cylinder walls becomes over-efficient. The oil film becomes sluggish, the oil spreads with difficulty and a great deal of power is lost in overcoming the oil drag on the piston.

The average temperature of the cooling water at the outlet (K3) should be between 100° F. and 130° F.

A temperature of about 115° F. is therefore preferable in order to insure a good piston seal and a free sliding motion of the piston—in short, the highest degree of operating efficiency.

As a result of efficient cooling, the average temperature of the cylinder walls is from 200° F. to 250° F., and this moderate temperature makes efficient lubrication possible.

The cooling water must be clean, for if impurities settle in the water jacket (K), the cooling of the cylinder walls (A) becomes defective, the temperature rises and preignition, caused by incandescent deposits inside the combustion chamber, is likely to occur. The lubricating oil film between the piston (B), piston rings (B1) and cylinder walls (A) is thinned out, losing its sealing power; the exploding gases blow past the piston rings; the oil is burned and charred and its lubricating value destroyed. Heavy wear and loss of power are the inevitable results.

GAS

Gas engines are operated by one of the following kinds of gas: natural gas; illuminating or town gas; suction producer gas; pressure producer gas; coke oven gas or blast furnace gas. Of these kinds of gas, all but natural gas are artificially made and their heat values differ considerably.

The more the given mixture of gas and air is compressed on the compression stroke the greater will be the power developed when the mixture is ignited.

When using rich, highly inflammable gas, such as natural gas, the compression pressure at the end of the compression stroke must be proportionately low, otherwise preignition will occur, due to the heat developed by compression.

With weak, less inflammable gas, such as the producer gases, the compression pressure at the end of the compression stroke can be made much higher.

This is shown in the following table, which gives average comparative heat values of gases in British Thermal Units (B. T. U.) per cubic foot of gas and operating compression pressure in pounds per square inch.

Kind of Gas	*Heat Value* B. T. U. per cu. ft.	*Comp. Pressures* Lbs. per Sq. In.
Natural	1000	100
Illuminating	600	120
Coke Oven	520	130
Producer (Suction or Pressure)	140	160
Blast Furnace	100	190

Natural Gas

Natural gas is found in the oil districts of the United States and Canada. It exists in the earth in pockets and is reached by wells which are drilled to the pockets. It is dry in its natural state, with a degree of purity that makes cleaning unnecessary.

Natural gas is highly inflammable. Freedom from impurities, low cost and efficiency make it the ideal fuel for gas engines where it can be obtained.

Illuminating or Town Gas

Illuminating gas is used for small gas engines only, up to a maximum of 50 H.P., which is rarely exceeded. Gas engines of larger size use producer gas because it is cheaper than illuminating or town gas.

Illuminating gas is made from bituminous coal by dry distillation. During this process an appreciable quantity of tar is carried over with the gas and is extracted. The purified gas is dry and is, therefore, an excellent fuel.

Coke is the product remaining in the retorts. It is free from volatile and tarry matters, but contains the whole of the ash originally present in the coal.

Coke Oven Gas

Coke oven gas is produced from bituminous coal, during the production of coke. A portion of the gas is used for firing the coke ovens, but the surplus gas can be used for operating gas engines.

Coke oven gas contains, besides coke dust, tar and sulphur, and, consequently, must be cleaned in the same way as gas produced in a pressure producer gas plant using bituminous coal.

Suction Producer Gas (Fig. 5, page 9)

Suction producer gas is usually made from anthracite coal, coke of various kinds, lignite, wood refuse, etc.

The engine draws from the gas producer, by suction, the gas required for its operation, hence the name *Suction Producer Gas.*

Suction producer gas plants are used for installations where the capacity of a plant, comprising one or more engines, does not exceed 500 H.P. In such plants, suction producer gas is used in preference to illuminating gas on account of the lower cost.

The suction producer gas plant, however, is small compared with a large illuminating gas works, and the method of cleaning the gas is less efficient. The gas usually, therefore, contains impurities. As this is an important point, it may be of value to illustrate the construction and operation of a typical suction producer gas plant (Fig. 5).

Air is drawn through the generator (1) filled with fuel (3), the lower portion of which is incandescent over the grates (2).

Water passes through the pipe (4) into the evaporating pan (5), which is circular in form. The heat of the burning fuel (3) in the generator (1)produces steam in the evaporating pan (5). The steam passes down through pipe (6) and, together with the air, enters the generator (1) from below the grate (2), rising through the fuel in the generator (1), and producing gas.

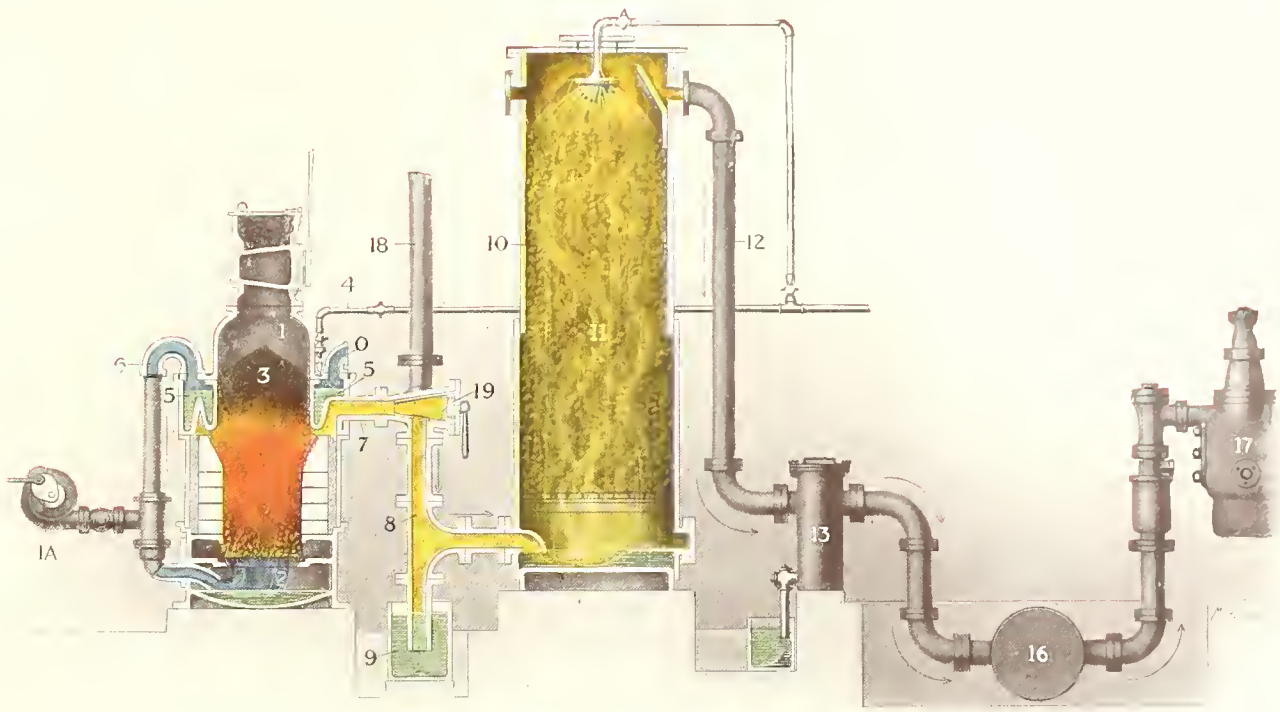

Fig. 5. Suction Producer Gas Plant

The gas travels through pipes (7) and (8); some dusty impurities drop into the water trap (9). The warm gas then enters the bottom of the scrubber (10), which is usually filled with clean coke or charcoal (11). These, being porous and bulky, absorb impurities easily, yet provide plenty of space for the circulation of the warm gas.

A water spray at the top of the scrubber (10) playing on the coke or charcoal (11) cools and purifies the rising gas. Through pipe (12) the gas goes to a tar separator (13), in which the tar is deposited by precipitation.

The tar separator is not necessary when the gas is produced from coke, which contains practically no tar.

Occasionally a sawdust filter is installed after the tar separator to free the gas from excessive moisture, developed when moist fuel, such as wood refuse, is used.

In order to insure regular flow of gas from the producer, a gas receiver (16) is installed. The gas engine sucks in the gas as required.

A hand-operated blower (1A) is used for furnishing an air blast when starting the generator. When blowing up the fire, the cock (19) directs the gas through the test pipe (18) to the atmosphere until the quality of the gas is correct. The cock (19) is then turned to the position shown in the drawing, allowing the gas to pass to the scrubber (10).

Pressure Producer Gas (Fig. 6, page 10)

Pressure producer gas is made from a variety of fuels, such as bituminous coal, lignite, coke of various kinds, anthracite, charcoal, sawdust, wood refuse, etc. The gas is produced under slight pressure; hence the name *Pressure Producer Gas.*

Pressure producer gas plants are sometimes used for installations as small in size as 200 H.P., but the installations usually range from 400 H.P. to 2000 H.P. A few installations exist having a total capacity of 2000 H.P. to 10,000 H.P.

In these larger installations comprising a number of units, pressure producer gas plants are used because they give a more uniform and reliable gas supply; also with them a greater variety of fuels can be used.

Where bituminous coal is used, rich in tarry matters, the cleaning plant for the gas must be more elaborate and efficient, and, therefore, more costly than in the case of suction producer gas plants.

Where the pressure producer gas plant supplies gas for installations of 2000 H.P. or more, a by-product plant for the treatment of the tar is frequently installed. Sulphate of ammonia and other valuable by-products are obtained from the tar, and this helps to lower the operating cost.

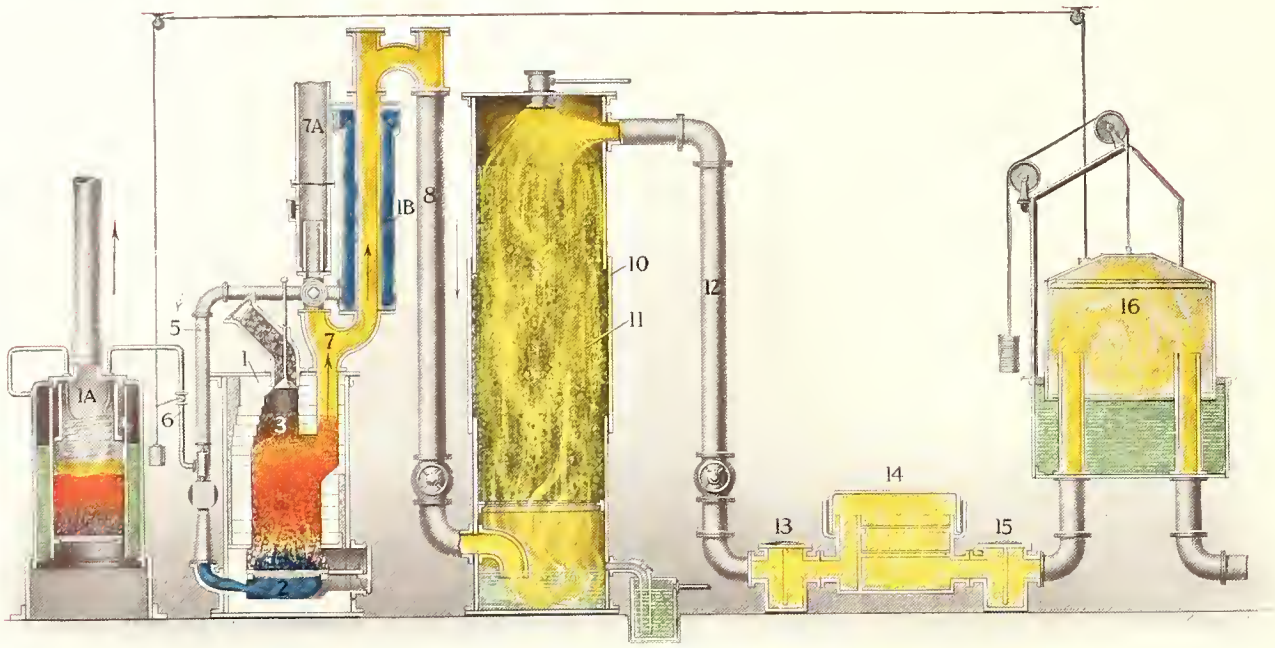

Fig. 6. Pressure Producer Gas Plant

Fig. 6 illustrates a typical pressure producer gas plant.

The generator (1) is filled with fuel (3). Steam is generated under slight pressure in the boiler (1A), flows through pipe (6), and injects air coming from the air heater (1B) through pipe (5) into the bottom (2) of the generator (1). Steam and air rise through the incandescent fuel in the generator; gas is produced and leaves the generator (1) through pipe (7). The warm gas passes through "down" pipe (8) and enters the bottom of the scrubber (10) filled with clean coke or charcoal (11).

Cold water enters the scrubber at the top and is sprayed over the coke, cooling and purifying the rising gas. Through pipe (12) the cool gas is conducted to the tar separator (13). Occasionally a revolving tar separator is employed, which frees the gas from the greater quantity of liquid tar by centrifugal force.

The gas now passes the drying and cleaning filter (14), filled with sawdust, and, after passing another tar separator (15), enters the gas receiver (16), which, in large installations, is similar to the gas holders in illuminating gas works.

From the receiver (16) the gas is delivered to the gas engine or engines as required, under a slight and constant pressure.

It is to be noted that producer gas is always moist and contains more or less impurities, such as soot, very fine dust, ash and tar—notwithstanding the precautions taken to clean it before it reaches the engine.

Where lignite is used as fuel, it is not necessary to introduce steam into the generator, the lignite containing sufficient moisture. The air is then blown into the generator by means of a centrifugal blower.

Blast Furnace Gas (Fig. 7, page 11)

Blast furnace gas is but rarely used for vertical gas engines, and then only in engines of at least 500 H.P.

The blast furnace gas coming from the blast furnace (shown at the left) contains a great quantity of impurities, consisting of lime dust, fine iron oxide, volatile matter and soot from incomplete combustion in the blast furnace, water impurities from the water used in washing the gas, and a small amount of sulphur.

The quantity of impurities varies from 12 to 25 grammes per cubic meter of gas, and is reduced in the cleaning plant to .01 to .03 gr. per cu. m. If the impurities are more than .05 gr. per cu. m. the gas is dangerous for the engines and will cause deposits and excessive wear of piston rings and cylinder walls.

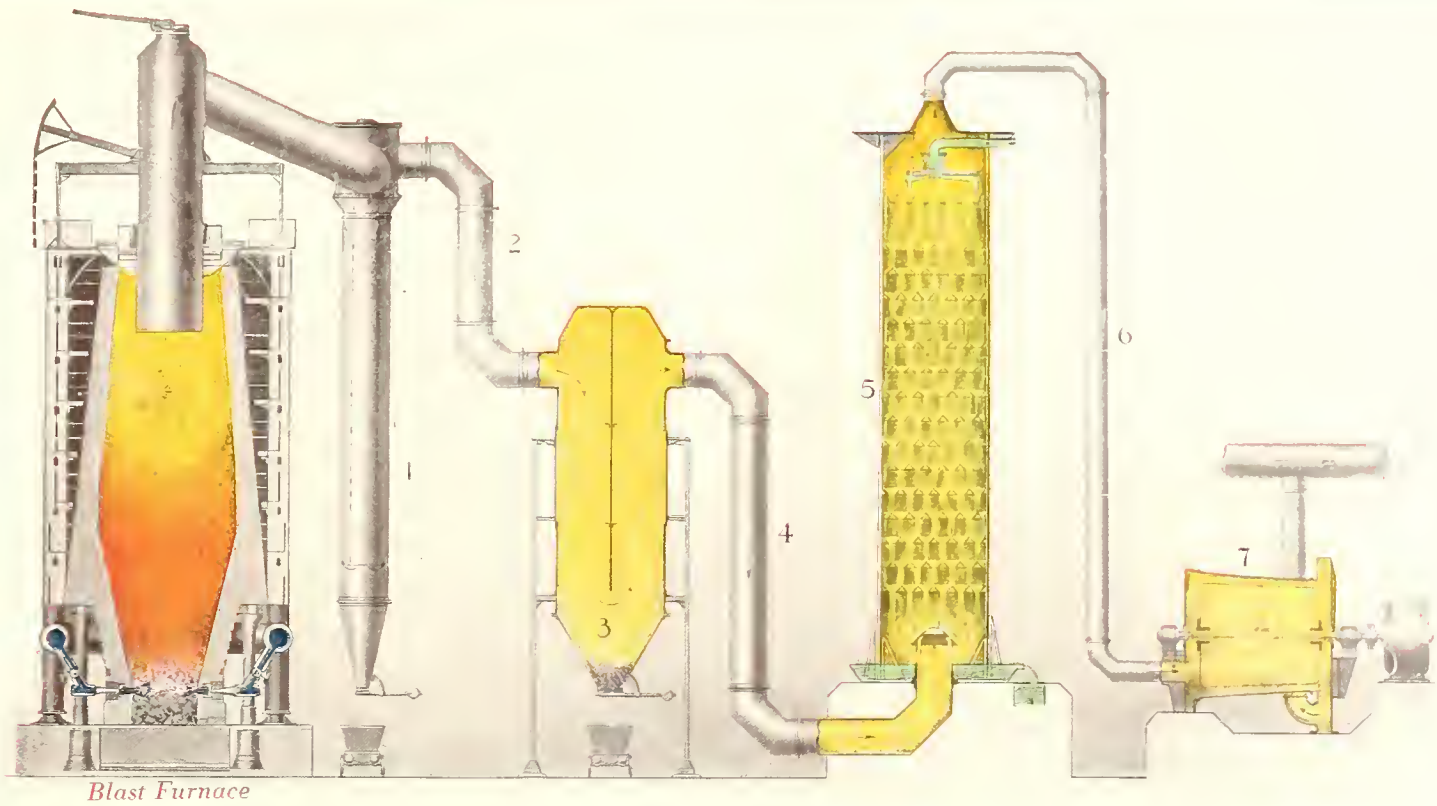

FIG. 7. BLAST FURNACE GAS SUPPLY

After leaving the dust trap (1) the gas passes through pipe (2) to a larger dust trap (3), continuing through pipe (4) to the scrubber (5). A water spray coming from the top of the scrubber (5) cools and purifies the rising gas. Through pipe (6) the gas goes to a rotary washing plant (7), which removes nearly all the solid impurities remaining in the gas. This is called the wet filtration process.

Another method, called the dry filtration process, is also in use. By this process it is possible to clean the gas without adding moisture.

From the cleaning plant the gas is conveyed through large gas mains to the gas-engine power house.

METHODS OF LUBRICATION

Vertical four-stroke cycle gas engines operate at high speed—from 225 to 350 revolutions per minute. In order to prevent the lubricating oil from splashing away from the bearings, all external motion parts are enclosed in a crank chamber or casing, so that the parts may be copiously supplied with oil, either by the splash system of lubrication or the force feed circulation system.

Crank Chamber Lubrication

Splash System of Lubrication (Fig. 2, page 4):

The lower portion (M1) of the crank chamber (M) is filled with oil to the level indicated in the drawing and an adjustable overflow pipe (M4) is fitted to one end of the crank chamber in order to maintain a correct oil level.

The bottom ends (C_3) of the connecting rods (C), when revolving, dip into the oil and splash it to all parts of the crank chamber, so that oil reaches the inner main bearings (F2), the crank pins (not shown), the wrist pins (B6) and the cylinder walls (A).

Sight feed drop oilers (S) feed oil into the outer bearings (F2). Leaving these bearings, the oil drops into the crank chamber, and thus makes up for the amount of oil that is burned away inside the cylinders. In place of sight feed drop oilers, a mechanically operated lubricator may be employed to supply oil uniformly to the main bearings. In such cases the lubrication system is entirely self-contained and automatic in action.

The surplus oil on the cylinder walls (A) is prevented from passing in too great quantities to the top of the piston (B) by means of one or two oil-scraper rings (B_3) fitted on the bottom portion of the piston (B). The pistons are preferably fitted with grooves from which the oil can be drained through holes (B_4) to the interior of the piston, whence it drops back into the crank chamber (M).

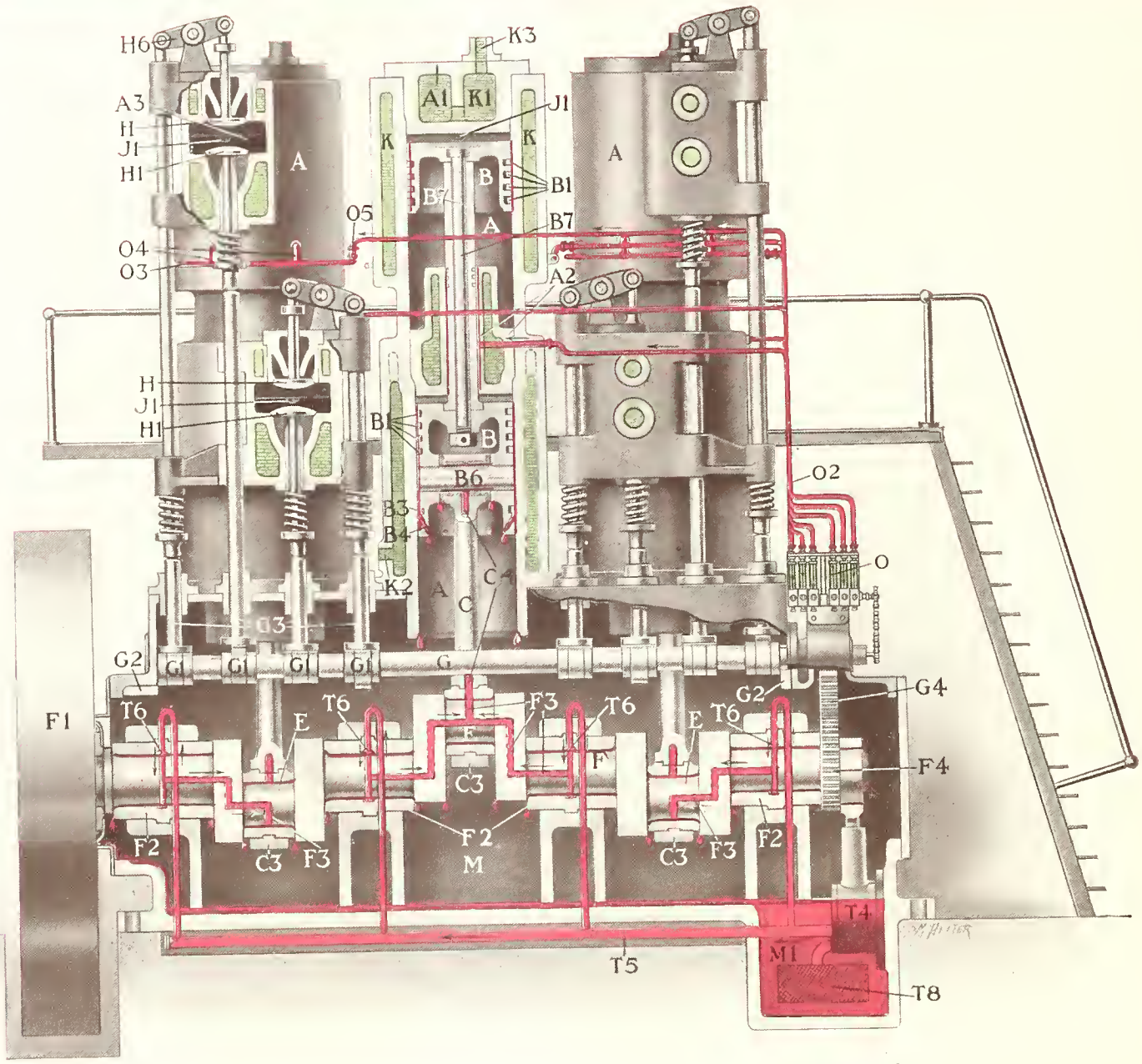

Fig. 8. Sectional View of a Vertical, Four-Stroke Cycle, Single Acting, Tandem Multi-Cylinder Gas Engine

Force Feed Circulation System (Fig. 8)

The oil pump (T4) sucks the oil from the oil reservoir (M1) through strainer (T8) and delivers it at from 5 to 15 pounds pressure per square inch through pipe (T5) into the main bearings (F2) at the points (T6).

The crank shaft (F) is hollow and the oil flows from the main bearings (F2) into the shaft and through oil passages (F3) into the crank pins (E), whence it reaches the wrist pins (B6) through passages (C4) in the connecting rods (C).

The oil leaving the wrist pins (B6) splashes on the cylinder walls (A).

Oil scrapers (B3) on the piston wipe the surplus oil from the cylinder walls (A), the oil dropping back into the crank chamber (M), as previously described.

The circulating oil sometimes passes through an oil filter and a cooler (not shown) and is returned to the oil pump (T4).

The force feed circulation system is always employed in cases of vertical four-stroke cycle tandem multi-cylinder gas engines and is much superior to the splash lubrication system.

As burned gases occasionally escape past the pistons into the crank chamber, an air-vent pipe is frequently fitted with a fan, which sucks fumes and vaporized oil from the enclosed crank chamber; at the same time cold air is constantly drawn through the engine and helps to cool the piston and crank chamber.

It is a common trouble that oil in the crank chamber will become contaminated with carbonized matter working down from the pistons.

In vertical two-stroke cycle gas engines, and in larger sizes of vertical multi-cylinder four-stroke cycle engines some builders have introduced a refinement (not illustrated) to overcome this trouble. The cylinders are raised above the crank chamber by means of a distance piece; the piston rods pass through scraper glands and are connected inside the crank chamber to cross-heads, which are supported by cross-head guides, the connecting rods engaging the cross-head pins.

By this construction it is possible to prevent carbonized matter from entering the crank chamber and contaminating the oil in circulation.

On the other hand, as the pistons are not lubricated by splash from the crank chamber, it becomes necessary to lubricate the pistons independently by means of a multiple feed mechanically operated lubricator. This practice permits the use of a different oil for piston lubrication, which is often desirable.

Cylinder Lubrication (Fig. 8)

In vertical multi-cylinder four-stroke cycle gas engines, the pistons are usually lubricated by splash from the crank chamber, as previously described.

In vertical tandem multi-cylinder four-stroke cycle gas engines, and in engines whose cylinders are raised above and separated from the crank chamber, it becomes necessary to lubricate each piston independently and also the piston-rod sleeve (A2). This is accomplished by means of a multiple feed mechanically operated lubricator (O) which is driven by the gas engine itself and delivers the oil under pressure to the points required.

One oil feed from the lubricator goes to each piston, delivering oil through a spring-loaded check valve (O5) into an annular oil tube (O3) surrounding the cylinder, from which tube four leads (O4) penetrate the water jacket and distribute the oil to the piston which spreads it over the cylinder walls.

As the oil is introduced at only one point in the annular oil tube (O3), the oil is likely to pass into the cylinder through the leads (O4) nearest this point. As a result the opposite side of the piston may get little or no oil direct from the leads.

It is good practice to have each point of entrance (O4) to the cylinder (A) fed by a separate oil pump, so that each feed (O4) can be controlled with certainty.

In smaller engines two separate oil feeds (O4), one at the front and the other on the opposite side of the cylinder, will provide efficient distribution of the oil.

Further, the oil should preferably be introduced between the first and second piston rings (B1) and at the exact moment when the piston (B) is at its lowest position. This enables the piston to carry the oil well into the cylinder —in fact, the piston acts as the oil distributor.

The oil feeds from the mechanically operated lubricator (O) should be capable of independent adjustment, so that the exact amount of oil required can be supplied to the sleeves (A2) and piston rings (B1).

OIL

Oxidation

In passing through the main bearings, crank-pin bearings, and wrist-pin bearings, the oil is subjected to high temperature and speed of the rubbing surfaces. Oxidation takes place, which is indicated especially with an unsuitable oil when it darkens in color, increases in viscosity and gravity and develops considerable acidity.

Temperature

As the crank chamber is enclosed, the heat radiated from the pistons and cylinder walls is, to a large degree, retained in the crank chamber, so that the oil in the crank chamber gets warm, reaching a temperature of from 100° to 160° F. If a temperature of 140° is greatly exceeded, the life of the oil will be shortened and it may throw down a dark deposit.

Contamination

In engines with cylinders mounted directly on the crank chamber, dark carbonaceous deposits from the pistons will find their way down the cylinder walls and fall into and contaminate the oil in the crank chamber.

High-Grade Oil

Owing to the high speed of vertical gas engines and to the large surfaces of pistons, crank pins and main bearings, the amount of power lost in friction is always high—from 12% to 25% of the rated horsepower, *regardless of the actual load on the engine.*

Only by the proper application of high-grade oils, especially manufactured, will the engines

continue to operate at their highest efficiency with minimum cost of renewals and repairs.

Unsuitable Oil

If an oil of *too heavy body* is used, the oil does not easily spread over the piston surface, and the friction is high owing to the heavy oil drag on the piston. Such an oil is also likely to lead to excessive formation of carbon deposits, developed not only by decomposition of the oil itself, but also because it will absorb and hold impurities introduced with the gas and air. Such impurities cling to the heavy oil and bake into crust-like deposits.

If an oil of *too light body* is used, notwithstanding a liberal oil feed, it will break down under the influence of high temperature in the cylinder, losing its sealing power and causing excessive wear of the piston, piston rings and cylinder walls. Deposits are formed, containing a large percentage of iron and iron oxides, due to the wear of the cast-iron piston, piston rings and cylinder.

Crank Chamber Lubrication (Fig. 2)

Splash System: Where the splash system of lubrication is employed, it is of the greatest importance that the correct high-grade oil be used, so as to get perfect distribution of oil to all parts.

A correct constant oil level must be maintained, in order to secure uniform splash to all parts and to obtain greatest economy. Connecting rods should dip into the oil to the same depth, and the oil level should be lowered until the formation of carbon deposits on the pistons is reduced to a minimum.

Irregular or *too high* an oil level means waste of oil and excessive carbonization.

Too low an oil level means unequal distribution and insufficient lubrication for some of the parts, resulting in excessive wear of those parts.

It cannot be emphasized too strongly that an adjustable overflow should be installed in order that the correct oil level, once established, can be automatically maintained.

Crank Chamber Lubrication (Fig. 8)

Force Feed Circulation System: Low-quality oil in continued use will throw down deposits of various kinds, due, possibly, to improper manufacture, and such deposits are liable to accumulate in dangerous places, such as the oil passages inside the main bearings (F2), crank pins (E) and connecting rod (C). This may result in reduction of oil feed to some parts of the engine; the bearing surfaces of the parts affected will overheat and be partially or wholly destroyed.

Wrist Pins

The wrist pins (B6) are placed inside the heated hollow trunk pistons (B). The pressures on the pins are high, and as the pendulum motion of the connecting rod is slight, the oil spreads with difficulty over the bearing surfaces; consequently, the staying and lubricating properties of the oil are of the greatest importance. This is so particularly with the splash system of lubrication (Fig. 2), where only a little oil gets into the wrist pins. Where the force feed circulation system (Fig. 8) is employed, wrist pins are abundantly and automatically supplied with oil.

Crank Pins and Main Bearings

The crank pins (E) transmit the whole power from the pistons to the main shaft. Therefore special care must be exercised to use oils of the proper quality. Ordinary or improperly selected oils allow temperatures to run high through failure to maintain an oil film in the bearings and there is considerable danger of heavy wear with resultant "pounding."

Pistons

The pistons (B) are the most vital parts of vertical gas engines.

The piston rings (B1) should be in good condition and pinned, so that only a sufficient amount of oil for full lubrication will reach the entire piston surfaces.

Too much oil splashed from the crank chamber, or too much oil fed directly to the piston, means that excess oil will pass to the piston tops, where it will burn and char and ultimately form deposits.

In the case of tandem multi-cylinder engines (Fig. 8), care should be taken that the quantity of oil fed from the mechanically operated lubricator (O) to the top pistons (B) and the sleeves (A2) is reduced to the exact amount required.

This applies also to multi-cylinder engines with a distance piece between the cylinders and the crank chamber.

Daily Treatment of Oil

To remove carbon and other impurities from the oil, it is good practice to *draw off from two to six gallons of oil* from the system *each day for treatment* in a steam- or electric-heated separating tank and afterwards in a suitable filter. The purified oil should be returned to the system, mixed with a little fresh oil at the same time that a corresponding quantity of oil is removed for treatment.

Where the quantity of oil in use is small, this practice is particularly desirable. In this way the vitality of the oil is kept up to as high a standard as possible, and the life of the oil is greatly prolonged.

DEPOSITS

Deposits are generally, not always correctly, termed carbon deposits.

Deposits may arise from one or several of the following causes: dust or dirt in the intake air; impurities in the gas; soot from incomplete combustion; overfeeding of oil; the use of an unsuitable oil.

Deposits form on the inlet valves and passages, in the cylinders, on top of the pistons, behind and between the piston rings and on the exhaust valves.

The formation of deposits under certain conditions leads to preignition and back-firing. (See section, page 16.)

Impurities in the Air

The intake air should be filtered through coarse canvas or similar material before passing to a large settling chamber, which will collect more of the solid impurities.

The air is usually not filtered even when the engines are placed in dirty surroundings. Impure intake air is therefore a frequent cause of deposits in gas engines, regardless of the kind of gas used.

In such cases a chemical examination will prove the presence of sand, brick dust, lime dust, etc. The deposit will also contain oil and partly decomposed oil, due to the action of the impurities on the oil under high temperature conditions. Furthermore, there will be present a percentage of iron and iron oxides, due to the wear of the piston rings and cylinders.

Impurities in the Gas

Natural or Illuminating Gas—Owing to the purity of natural or illuminating gas, deposits, if not due to the oil, can develop only in case of incomplete combustion, which may be due to poor ignition, improperly timed inlet and exhaust valves or an over-rich mixture.

Producer or Coke Oven Gas—Where producer or coke oven gas is in use, deposits may be caused by impurities in the gas, such as ash, fine coke dust, free soot, or tar passing into the engine.

All solid fuels contain ash, and a regular feeding of fuel through the generator and removal of clinker from the grates are necessary.

Regular firing of the generator is important, as it prevents the layer of fuel from getting too low. Ash is constantly seeking its way from the fire down through the grates, and if the grates are not covered with a sufficient layer of fuel, fine ash is likely to be carried up and away with the gas.

Wet gas, such as the producer gases, forms a paste with the impurities in the air or gas, providing a ready base for the formation of deposits, collecting in inlet valves and passages and on the internal surfaces of the engine exposed to the gas, adhering to and contaminating the oil film on the piston, piston rings and cylinder walls.

Where coke is used, there is no tar, but coke dust may be carried over in such fine form that neither the water trap (9), scrubber (10), nor filter (14) (Figs. 5 and 6) will remove it.

Where gas is produced from anthracite coal, tar and soot may be carried over, although anthracite contains only a small percentage of tar.

Where gas is produced from lignite, which contains more tar and soot, the danger of the formation of deposits inside the engine is more pronounced, due to these impurities. Lignite also contains a small percentage of sulphur. This in many cases will cause a blackening of the piston surface, which, however, in itself need not cause any trouble.

Where gas is produced from bituminous coal, which contains a large percentage of tar, there is a greatly increased likelihood of the gas carrying soot and tar into the engine. If, upon examination of the inlet valves, tar and soot be found, this proves that the trouble is due to impurities in the gas, as it is impossible for the lubricating oil to reach the inlet valves.

Overfeeding of Oil

Excess oil passing into the cylinders causes deposits to develop on the piston heads, in the

piston ring grooves and between the piston rings. A frequent cause of this trouble is too high an oil level in the crank chamber.

The deposits soon cause the piston rings to cement in their grooves. Excessive wear takes place on the piston rings and on the cylinder walls, with the possible result, in extreme cases, of breaking the rings or stopping the engine altogether.

Unsuitable Oil

Unsuitable or low-quality oil *must* be used in excess. Even so, it will fail to provide satisfactory lubrication. The surplus oil passes the pistons, burns and chars freely, and readily combines with impurities in the gas or products of incomplete combustion, forming hard crust-like deposits.

Preignition and Back-Firing

Where deposits develop inside the combustion chamber, particularly if the water cooling is inefficient, they often become incandescent and the fuel charge is fired before ignition would ordinarily take place. This is called preignition. The explosion acting against the rising piston causes abnormally heavy strains on the piston (B), wrist pin (B6) and crank pin (E).

Preignition in the presence of deposits may also occur when an engine designed for suction gas uses illuminating gas, as the latter is richer and will ignite at a lower compression pressure than producer gas.

With blast furnace gas it is difficult to prevent preignition, owing to the quantity of fine lime dust in the gas which, when it settles inside the cylinders, easily becomes incandescent.

Preignition explosions can always be distinguished from ordinary explosions, as they are louder and sharper.

Sometimes the fuel charge does not fire inside the engine, owing to the momentary failure of the electric spark or because the mixture of gas and air is too weak to explode. Suction producer gas sometimes becomes weak, particularly when the load on the engine is suddenly increased and more gas is required.

In these cases the unburned fuel charge is passed out of the engine into the exhaust pipe, where it is exploded with a banging noise by the hot gases of previous or following explosions. Such explosions in the exhaust pipe are called exhaust explosions or back-firing.

Lubricants

A grade for each type of service

DOMESTIC BRANCHES

DETROIT, MICH. 321 Free Press Bldg.
BOSTON, MASS. 49 Federal Street
NEW YORK, N. Y. 61 Broadway
CHICAGO, ILL. Fisher Bldg.
PHILADELPHIA, PA. Brown Bros. Bldg.
INDIANAPOLIS, IND. Merchants' Bank Bldg.
MINNEAPOLIS, MINN. Plymouth Bldg.
PITTSBURGH, PA. Fulton Bldg.
KANSAS CITY, KAN. Riverview Bank Bldg.
DES MOINES, IA Shops Bldg.

FOREIGN BRANCHES IN PRINCIPAL CITIES THROUGHOUT THE WORLD

VACUUM OIL COMPANY

Rochester, N. Y., U. S. A.

Specialists in the Manufacture of High-Grade Lubricants for Every Class of Machinery—Obtainable Everywhere in the World